GPM-Eliminator™ BCFR Pump Installation, Operation & Maintenance Manual

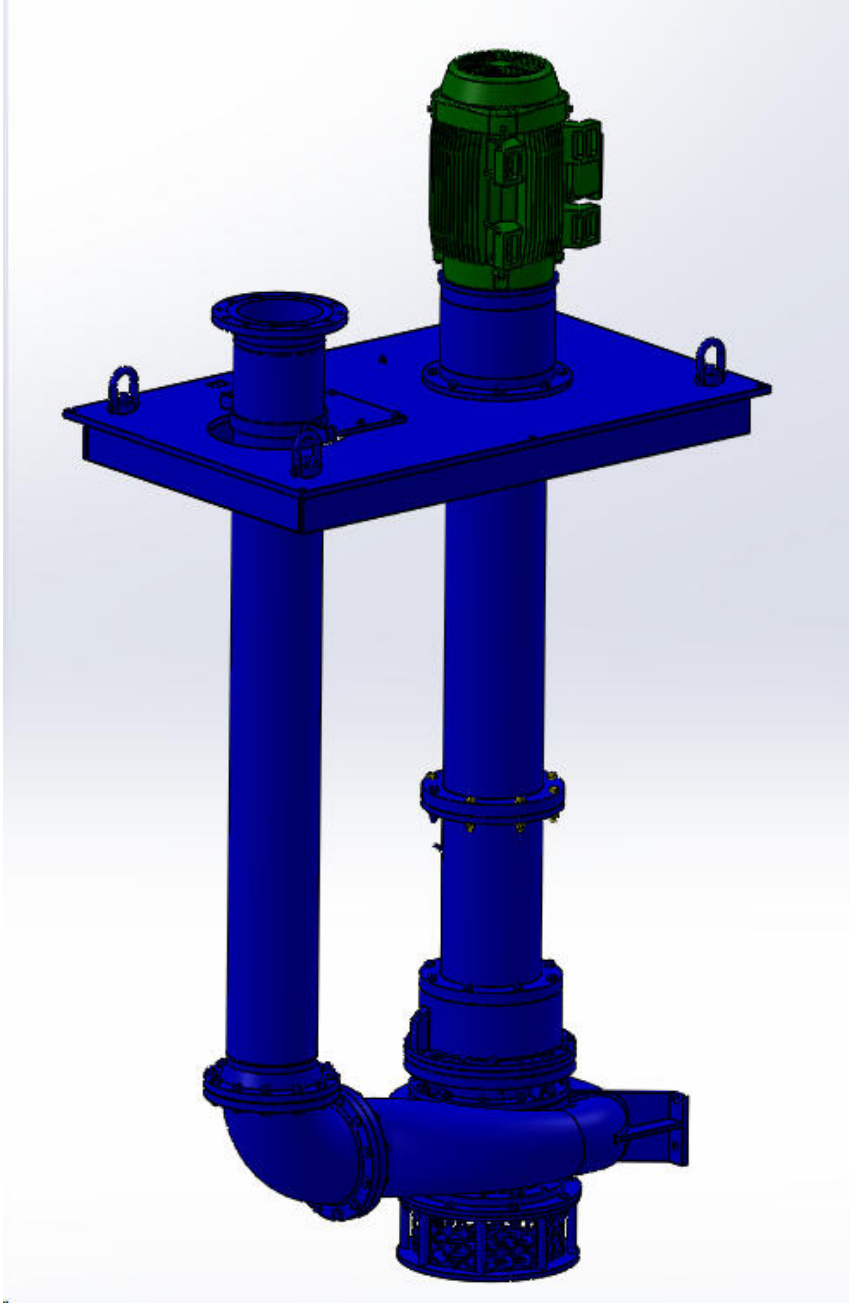

Revision: 1
Approval Date: 6 FEB 2017

Page Intentionally Left Blank

Foreword

Thank You for purchasing a GPM, Inc. Eliminator pump. Read this manual carefully to learn how to safely install and operate your pump. GPM, Inc. has developed the high quality pump in your possession through 30+ years of expertise and engineering. Our staff has worked to ensure the highest quality materials and engineering practices have come together to bring you the best equipment available.

The equipment covered in this manual will give years of incident free operation if proper installation, operation, and general maintenance are performed. This manual covers basic installation and is an operation guide specific to the equipment in your possession. GPM, Inc. has experienced staff that can offer further information at your request.

The information within Appendix A will be required for any parts or service inquiries. Contact your local GPM, Inc. Sales Representative or the GPM headquarters at:

GPM, Inc. | 4432 Venture Avenue | Duluth, MN 55811 | 218-722-9904 | www.gpmco.com

This manual consists of multiple parts. The general body covers Storage, Installation, Operation, and Maintenance of your GPM, Inc. Pump. The appendices contain specific information to your pump or a similar grouping of pumps. Please refer to the table of contents for further detail.

Safety Warning

Only qualified individuals should operate, install, and maintain GPM, Inc. equipment. It is important that the entire contents of this booklet be available, read, and understood by installers and operators prior to beginning work.

Electrical, hydraulic, and rotating sources of energy can cause severe injury if effective and adequate safety measures are not in place. Ensure all applicable electrical, fire, and building codes are followed to prevent accidental electrical shock/electrocution, fire, personal injury, and/or facility damage. Ensure adherence to all applicable labor and safety regulations to decrease risk of injury or death.

Never operate equipment above the operational capacity, speed, temperature, pressure or environment it was designed for. Damage to the equipment and/or operators could result from equipment failure or misuse. The provision of safety systems to protect workers and equipment are the responsibility of the owners and operators of the equipment. **GPM, Inc. will not assume responsibility** for misuse of equipment, improper use of safety equipment, or the lack of safety precautionary measures that may result in injury or property damage.

Disclaimer

Refusal to ensure adequate safety precautions and thorough system analysis can result in injury or damage to property. GPM, Inc. cannot assume responsibility for facility, staff, and non-GPM, Inc. equipment damage or injury from improper use of GPM, Inc. equipment. The design of piping systems and aspects of sump design are the responsibility of equipment users. GPM, Inc. data and comments are offered as an aid, but GPM, Inc. cannot assume responsibility for design and/or operational results. GPM, Inc. recommends that the customer consult a specialist skilled in the design of structural and related piping systems so as to supplement and interpret GPM, Inc.'s information and to ensure a successful installation.

Page Intentionally Left Blank

Contents

Page Intentionally Left Blank

NOTES:

NOTES:

GPM-Eliminator™ Pump Limited Warranty

General Provisions – The warranty described herein is provided by GPM, Inc. (the "Company") with corporate headquarters at 4432 Venture Ave., Duluth, MN 55811. Under this warranty, the Company will repair or replace, at its option, any part or component that is found to be defective in Company materials or Company workmanship regarding a GPM-Eliminator pump for a period of two years from the date the unit is first installed for use, or up to thirty months from the date of shipment of the unit from the factory, whichever comes first. Warranty service, when provided, shall be without charge to the purchaser for parts and labor. However, the purchaser must pre-pay the costs of Company service technician travel to the location of the unit, including employee lodging and meals, or must pre-pay transportation of the product to the Company's authorized service/repair facility. When requested by the customer, the customer shall agree to pay for any overtime charges and for any service and/or maintenance not directly related to any defect covered under this warranty (in conjunction with Company standard field service rates). This warranty is limited to the original purchaser and is not transferable. Any repaired product is warranted for a maximum of 12 months from the date of shipment.

Parts and Labor Warranted – All parts of any GPM-Eliminator pump including the motor, pumping unit and electrical components are warranted against any defect in materials or workmanship when properly installed, used and maintained by the purchaser based on the warranty time periods specified above.

What is Not Warranted – This warranty will not apply to any Company product that has been disassembled without express written or verbal approval by the Company. This warranty shall not apply to any product that has been altered, modified, misused, improperly installed, neglected, or misapplied. This shall include acts of God and force majeure. This warranty shall not apply to any previously used equipment re-sold by the Company as "used."

Obtaining Warranty Service – To be eligible for warranty service, you must; (1) report any defects or issues in writing, directly to the Company, and request a repair within the stated warranty period; (2) provide in writing, the date the product was shipped and/or installed in service; (3) send the equipment pre-paid freight to the Company or to one of its authorized service/repair facilities, or schedule an appointment with the Company for a Company service technician to travel to the location of the unit.

Warranty Limitations – To the extent permitted by law, neither the Company, nor any company affiliated with it, makes any warranties, representations, or promises as to the quality, performance or freedom from defects of the equipment covered by this warranty. IMPLIED WARRANTIES OF MERCHANTABILITY AND FITNESS FOR A PARTICULAR PURPOSE, TO THE EXTENT APPLICABLE, SHALL BE LIMITED IN DURATION TO THE APPLICABLE PERIOD OF WARRANTY STATED ABOVE. GPM, Inc. EXPRESSLY DISCLAIMS ANY LIABLITY FOR CONSEQUENTIAL OR INCIDENTAL DAMAGES OR BREACH OF EXPRESSED OR IMPLIED WARRANTY.

No Distributor Warranty – The selling distributor makes no warranty of its own regarding this product. The distributor makes no representations regarding the Company and may not modify the terms of this warranty in any way.

Purchaser's Responsibilities – (A) All maintenance and depreciation costs associated with product use. (B) Consequences of negligence, misuse, or accident involving the product, or improper product application, installation, or storage. (C) Consequences from a non-authorized party providing service to GPM, Inc. equipment, and the consequences of modification or alteration of equipment. (D) Costs of transporting equipment to the location of warranty service and the incidental costs from transportation of equipment (e.g. tolls). If there is a warranty issue, the Company will pay the return freight. (E) Installing, operating, and maintaining GPM, Inc. equipment in accordance with the I.O.M. manual.

Page Intentionally Left Blank

Introduction

General:

This manual contains instructions for installation, operation and maintenance of your GPM-Eliminator™ submersible pump. ***It is important that the entire content of this manual be studied before the pump is installed, operated, or maintained.*** The GPM-Eliminator™ has been designed to provide both safe and reliable service. However, it is both a pressure vessel and a piece of rotating machinery. Therefore, the operator(s) must exercise proper judgment and safety practices to avoid damage to the equipment and surroundings as well as prevent personal injury. The information in this manual is to be treated only as a supplement to the general instructions for operation, maintenance, and safety procedures at your facility. The instructions in this manual are intended for personnel with a general training in the operation and maintenance of centrifugal pumps.

Safety:

Every GPM-Eliminator™ pump and GPM, Inc. product is designed and manufactured for safe operation. It is assumed that your safety department has established a safety program based upon a thorough analysis of industrial hazards. Before installing, operating, or performing maintenance on the pump and associated components described in this manual, it is suggested that the safety program be reviewed to ensure that it covers the hazards present. Many hazards exist and vary from application and location. Be aware that the guidelines in this manual cover the **general hazards** that will be seen in typical installations.

Due consideration must be given to those hazards arising from the presence of high voltage electrical power, rotating belts, and hydraulic pressures from pumping operations. Proper installation and care of monitoring devices and over pressure regulation equipment should also be an essential part of a safety program. Precautionary measures to prevent unwanted release of energy, energizing of equipment, or powering equipment during maintenance operations must be considered to prevent injury or damage to equipment.

In general, all personnel should be guided by the basic safety concepts associated with the equipment and process defined by the operators' safety program. It should be understood that the information contained in this manual does not relieve operation and maintenance personnel of the responsibility of exercising good judgment in operation and care of the pump and its components. Furthermore, ***a robust and effective safety program is the responsibility of the operating entity.*** Lock-out, tag-out, personal protective equipment, and equipment operation safety procedures should be in place by the occupational health manager and operations management prior to installation and operation of equipment.

Important Information:

In the interest of personnel safety and protecting equipment, this manual will use **"Road Signs"** intended to emphasize certain concerns.

The definitions of these **"Road Signs"** are as follows:

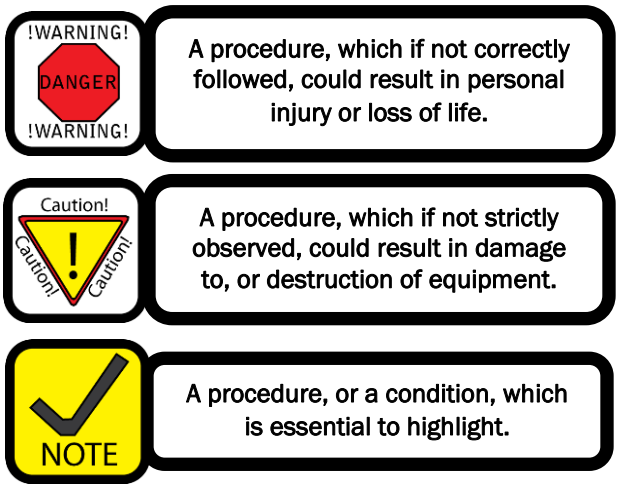

The successful installation and operation of a GPM-Eliminator™ pump requires the following 5 steps:

1) Inspect equipment and remove from shipping crate (**Shipping & Handling**).
2) Prepare area for installation, perform pre-installation checks, confirm rotation, and review installation plan (**Pre-Install Check**).
3) Move pump into position and connect piping (**Installation**).
4) Operate the pump (**Operation**).
5) Periodically inspect the pump and perform maintenance as necessary (**Maintenance**).

A large number of pump failures occur from improper installation. It is recommended that this manual be read and fully understood PRIOR to installation, operation, and maintenance.

Terminology Reference:

Here is a list of common terminology that will be referenced throughout this manual.

NPSH.....Net Positive Suction Head
NPSHr.....Net Positive Suction Head Required
NPSHa.....Net Positive Suction Head Available
GPM.....Gallons per Minute
PSI.....Pounds per Square Inch
PSIg.....Gauge Pressure
PSIa.....Atmospheric Pressure
TDH.....Total Dynamic Head
RPM.....Revolutions per Minute
A.....Amperes, Electrical Current
V.....Voltage
BEP.....Best Efficiency Point

Shipping & Handling

Handling:

Use care when moving the pump and accessories. Rough handling of the equipment can cause damage to the machine, the facility, or injury to people. Do not move equipment until a receipt inspection has been performed.

Caution!

Be sure any equipment used to lift or move components is capable of supporting the weight encountered.

NOTE

Dropping, striking, and other physical impact of the pump may VOID WARRANTY.

Carefully sling the equipment using straps. Do not use chains or wire rope to lift equipment. Chains and wire rope can scrape off paint, or slide off the pump causing loss of control of the load.

Caution!

Do not lift by using wire rope or chain, as this can cause an unstable load if lifting material slides, or slips off equipment.

The loss of control can result in a swinging load, dropped equipment, or sudden impact with the surrounding environment. Avoid using straps on or near sharp edges or areas of the equipment that could cause damage to hoisting straps. Do not lift from the eye bolts on top of the pump. These eye bolts are required for re-assembly, and are not designed to hold up the entire weight of the pump.

Caution!

Slinging should be done by a qualified rigger using approved rigging techniques.

Plan the lift to ensure no loads travel over a person, roadway, or present a similar condition that could endanger life or property. Plan to close off these areas, or guard the area to ensure a safe lift. Follow all policies in place for your organization when lifting, moving, or transporting GPM, Inc. equipment.

!WARNING! DANGER !WARNING!

Never lift a load over someone, or allow people to travel under a lifted load. GPM, Inc. is not liable for damages caused by poor lifting practice.

Prior to moving any GPM, Inc. equipment, all individuals performing the move should understand best practices for rigging and hoisting, operation of the equipment, and the risks of operating that equipment.

Caution!

Ensure all equipment to be lifted is properly rigged and secured before lifting.

Do not lift equipment by the discharge piping, flanges, or equipment guard. Consult GPM, Inc. if you have any questions pertaining to rigging of the pump.

!WARNING! DANGER !WARNING!

Do not attempt to move pump by hand. Strain, injury, or physical harm could result from uncontrolled equipment movement.

The equipment is normally shipped in a wooden crate or on a wooden pallet. Care should be taken when disassembling the container to ensure no damage to the power cord or paint. Gloves should be worn to reduce exposure to splinters, metallic dusts, and physical abrasion while handling the pump and shipping materials.

Caution!

Only lift equipment from hoisting devices capable of handling weight encountered.

Check Upon Arrival:

All equipment should be inspected immediately upon arrival and any irregularities arising due to shipping should be reported immediately to the carrier.

Care should be taken when unpacking pumps (see Handling). Stability of the pump and shipping materials should be checked prior to unloading. A copy of this manual, as well as instruction sheets for other various components (such as an electric panel or variable speed controller), will be included in the shipment. Put these documents in a safe and accessible place for ease of reference. Pump parts and accessories may be packed inside shipping containers or attached to skids in individual packages. Inspect all containers, crates, and skids before discarding. If any parts or documents are missing, contact GPM, Inc. immediately.

Storage:

If the pump is not installed upon receipt, find a clean, dry location for storage. The unit should be stored in a level position. If possible, store the pump using the original shipping container, crate and blocking.

NOTE

Storage outside of the scope of this manual may VOID WARRANTY.

Storing for Up to One Month:

If the pump is not to be installed for a period of one month or less, store in a clean and dry location. Store it on a level surface using the original shipping crate. Ensure that it is adequately protected and sealed off from intrusion by animals, falling objects, etc.

Long Term Storage:

In the event that a pump needs to be put into storage for an extended period of time (longer than 1 month), the following should be done:

- Store the pump in a clean, dry location where possible. If the pump is to be stored outdoors, cover with a protective material and ensure that the cable is not exposed to sunlight. Do not allow the pump to be stored where temperatures may fall below freezing.
- The pump may be stored upright or on its side. It is recommended that the pump be stored in its original shipping crate or pallet whenever possible.
- Rotate the shaft every 2 months to prevent damage to the bearings and sticking of the mechanical seal faces. Reference the "Manual Impeller Rotation" and "Electrical Impeller Rotation" sections for further instructions.
- If the pump is kept in storage for more than 6 months, the barrier fluid should be checked for moisture and replaced if moisture present. Refer to the Maintenance section for instructions on changing the barrier fluid.

Manual Impeller Rotation:

The impeller can be rotated through use of a wooden dowel or stick. Hard objects like metal pipes and rods are not recommended since they can damage the impeller or other pump component. The impeller can be engaged by inserting the wooden dowel into the discharge outlet or suction inlet.

When rotating the pump manually while in storage, the following checklist should be followed:

1. Remove protective materials covering the discharge flange and suction inlet.
2. Insert dowel through discharge outlet or suction inlet.
3. Smoothly push the impeller to rotate in the direction of operation. Prevent any impact loading.
4. Rotate impeller 10-15 times.
5. Replace protective materials on flanges.

Electrical Impeller Rotation:

The pump can also be started electrically while in storage. Operate the pump temporarily (less than 15 seconds) in the correct rotational direction. GPM-Eliminator™ submersible pumps are designed to operate for short periods while dry and out of a liquid. Extended periods of operation should be avoided unless cooling water is provided (see Operation section).

When starting the pump electrically while in storage, the following checklist should be followed:

1. Ensure that the impeller and wet end assembly are clear of debris and materials. Remove protective materials covering the discharge flange and suction inlet
2. Place the pump on a stable foundation.
3. Reference the "Power Supply" directions within the "Pre-Install Checks" to correctly and safely connect the pump power cable to a power source.
4. Ensure there is a means to quickly stop the motor (kill switch) within reach of operator.
5. Start and run the pump for approximately 15 seconds.
6. Safely disconnect the pump power cable from the power source.
7. Replace protective materials on flanges.

Returning to Service:

When the pump is taken from extended storage or initially installed, ensure this manual is fully understood and all pre-start and maintenance checks are performed. Ensure that there is no damage to pump or foreign debris is in pump casing or piping.

Pre-Install Checks

Prior to installing GPM, Inc. equipment, several checks should be performed to ensure the equipment is installed to design specifications. These steps will ensure the longevity of the equipment and will simplify installation.

Power Supply Check:

A qualified electrician should perform all steps of the electrical installation to ensure safety of equipment and individuals. All applicable electrical state and local regulations must be adhered to.

Confirm that all components of the power supply can meet the electrical demands of the motor. Refer to **Appendices B and E** for a motor information and wiring diagrams. Line power quality should be consistent with the demands of the equipment.

Caution!

Poor power quality or a fluctuating power source can damage equipment and prevent the pump from operating as designed. This damage may VOID WARRANTY.

The power supply must be locked out prior to wiring.

!WARNING! DANGER !WARNING!

Never work on live electrical equipment. Always tag and lock-out equipment prior to installation, maintenance, and removal.

The motor must be properly grounded. Continuity of the electrical system should be checked prior to energizing the motor. A dry start prior to lowering the pump into the sump must be done to check for correct rotation (as described in the "Rotation Check" section). Minimize the number of motor starts (shown in Appendix B) to prevent damage to the motor.

Caution!

Excessive starts or inadequate rest time may damage equipment and VOID WARRANTY.

Liquid End Check:

Impeller clearances were set at the factory and confirmed to ensure proper operation. The impeller should rotate smoothly and have adequate clearance from the casing and wear plates. Turn the pump shaft by hand prior to start-up. The shaft should turn freely, but in the event it does not, contact GPM, Inc. Do not pound, hit, or impact the impeller or casing with a hammer or similar tool to free the impeller. Cracking, chipping or rupture of a component could occur, and **WILL VOID WARRANTY**.

NOTE

Hitting or impacting equipment components can cause damage. This damage WILL VOID WARRANTY.

Caution!

DO NOT DISASSEMBLE PUMP.

Rotation Check:

Once connected to a power source, visually check for proper rotation before installing the pump in the sump. The impeller rotation is to be **clockwise (SBGT, SBEW, SBFR, and SBHH pumps) or counterclockwise (SBLH pumps) when viewed from the motor end.** Powering the motor for a moment is adequate to check powered rotation. Changing any (2) of the power leads can correct rotational issues; see **Appendix E** for electrical diagram.

NOTE

Operating the pump in the reverse direction may cause excessive wear to wet end components. Ensure proper motor rotation prior to installation.

!WARNING! DANGER !WARNING!

Never work on live electrical equipment. Always tag and lock-out equipment prior to installation, maintenance, and removal.

Power Cable Check:

Inspect the cable sheath for kinks, nicks, bulges, cuts, deep abrasive wear, excessive twisting, and deformations.

Installation

This section will assist in the installation of the GPM, Inc. pump in your possession.

Location:

Careful observation should be made of the mounting guides and the path the pump will take to the installed location. Keep in mind the discharge piping and other equipment around the installation location.

Ensure lifting and moving equipment is capable of the weight encountered and operators are trained to operate the equipment.

The pump location should be thoroughly assessed to ensure adequate worker room, hoist room, and that equipment movement space is available. Consideration should be given to lift equipment and to the number of people required to enter the space for installation. Egress from the sump or pump location should also be considered. Voltage and amperage requirements, power source quality, feed piping and discharge piping lengths, and fluid depths should all be considered. Obstructions that block access, or egress should be moved to ensure safety. Extra care should be given to transport of the equipment to the location. This may include areas to stage the pump, or additional lifting equipment to manipulate the pump to a required orientation for installation.

Caution! Caution! Caution!

Keep the pump upright if possible to ensure adequate lubrication.

The pump will rest stable on a bed of settled solids and often will NOT require the sump to be cleaned before installation. Some solids will compact like concrete around the pump during operation if the fluid has high viscosity or the solids pack easily (e.g., lime slurry).

It is recommended that the pump should be held by an adequate fixture point to reduce twisting and possible damage from movement caused by the start-up reaction torque of the pump.

Discharge Piping:

Rubber hose that is one size larger than the pump discharge size is typically used with submersible slurry pumps. It is lined with rubber for maximum wear resistance to abrasive materials. The discharge piping shall not be used to hold the pump in place, nor shall the discharge piping be used to lift the pump or associated equipment. The discharge flange loading should be minimal for submersible pumps. It is the responsibility of the installer to configure the pump for minimal flange loading during installation.

Caution! Caution! Caution!

Do not lift the pump from the discharge line. This may cause damage to equipment or increase the risk of an accident occurring.

Electrical:

Consult the electric cable wiring diagram schematic for proper connection to the power source (**Appendix E**). A trained and qualified electrician should sign off on the particular

wiring and electrical operation of GPM, Inc. equipment at your facility prior to start-up. All applicable electrical state and local regulations must be adhered to.

Power cable care is of the utmost importance to the life of the equipment. Do not pull on or cause tension to be applied to the cable. Do not allow the free end of the cable to enter liquids at any time. The operator should do the following to ensure cable integrity:

1. Prevent the free end of the cable from being submersed in ANY liquid.
2. Inspect the cable sheath for kinks, nicks, bulges, cuts, deep abrasive wear, excessive twisting, and deformations.
3. Protect the cable from being pinched by the weight of the pump, or other objects. Keep materials off the cable.
4. Only use the cable length provided without splicing or adding length.
5. Prevent the cable from rubbing on sharp edges, and only anchor to smooth surfaces.
6. Anchor the cable to prevent sump input material from falling on the cable. Large sized particles at high velocities could cause damage to the cable.
7. Prevent the cable from lying against the pump during operation.
8. As a rule of thumb, do not allow the pump power cable to bend in a radius greater than 10 times the diameter of the cable.

Never drag cable across the ground or debris. Do not allow sharp objects to contact the cable. Ensure no cuts, nicks, scraps or slices are present in the cable.

.

Operation

Operating a GPM, Inc. pump is simple and straight forward. Regular maintenance requires that the pump be stopped and de-energized. Topics concerning starting the pump, operation inspection, and stopping the pump will be covered in this section of the manual.

Starting the Pump:

It is best to start a submersible pump on a clear working liquid (water), to prime the discharge line and purge any sediment. The discharge piping should be clear of debris and partially filled with working fluid prior to start. The pump should be held by adequate fixture points to reduce twisting and possible damage from movement caused by the start-up reaction torque of the pump.

Ensure sump liquid levels are adequate to ensure a flooded pump suction, and to meet the cooling requirements of the electric motor.

Changes in sump liquid temperature can change the operation of the pump, and could damage pump components, VOIDING THE WARRANTY.

The liquid level should be above the electric motor housing at all times during operation unless explicitly approved by GPM, Inc. Engineering.

Submersible pumps are designed to operate while completely submerged. Contact GPM, Inc. for assistance in partially submerged applications.

Ensure all people, tools, and documentation are safe prior to starting the pump. The pump cable should be anchored to reduce coiling and to prevent moderate lengths of cable from falling inside the sump. Entrainment of fluids can pull the cable into the pump if excessive lengths are allowed near the pump intake.

To avoid damage to the pump or injury to operating personnel during start-up and operation:

A) **DO NOT** run the pump with a closed discharge.
B) **DO NOT** operate with safety shields or other safety equipment removed.
C) **DO NOT** operate the pump outside of the design and application parameters.
D) **DO NOT** run pump dry.
E) **DO NOT** weld anything on pump or pump frame.
F) **DO NOT** use the eyebolts at the top of pump as lifting points.

Operating Checks:

Operation of the pump should be monitored regularly. Checks for wear and proper operation should be performed in accordance with the inspection and maintenance schedule found in the maintenance section of this manual.

The prevention of rotation due to reverse flow should not be overlooked. Flow rates, operating pressure levels, and temperatures should be monitored to anticipate, and prevent operation problems.

Adequate fluid velocity must be maintained in the discharge pipe to prevent material from settling and causing blockage. Consult GPM, Inc. Engineering for minimum velocities to ensure settling does not occur for your application, particle size, and particle type. Visual inspection can be done to periodically monitor for settling issues within particular sections of piping.

Material settling and debris buildup at the bottom of the sump should be monitored. Increased build up could mean a change in operation of equipment, or pumping system variables. Review operational measurements for these changes to ensure peak performance of GPM, Inc. equipment.

Electrical checks should include cable integrity and sensor operation. All submersible motors are equipped with bi-metallic electro-mechanical temperature sensors. A sensor is embedded in each of the motor windings. The sensors are wired in series, so if one trips on temperature, the entire circuit is opened. When used with an optional pump control package, the sensor can be configured to trigger an alarm or shut down the pump until it has cooled.

Caution!

If an alarm is triggered, resolve the problem or shut down the pump as quickly as possible. Extended use when a problem is present could damage equipment.

A float switch is used to detect water leakage across the lower mechanical seal faces and into the oil chamber. When used with an optional pump control package, the sensor can be configured to trigger an alarm or shut down the pump.

Caution!

The seal sensor on submersible GPM-Eliminator™ pumps must be in a vertical position for proper operation.

Inspection of equipment should ensure the sensors are in good working condition and that all relays and warning lights are functioning properly.

NOTE

Thermal overload and seal sensor circuits are wired normally closed.

Stopping the Pump:

The pump may be stopped and restarted without damage if the number of starts is fewer than the threshold values listed in **Appendix B**. Flushing the pump and discharge line to prevent blockage is recommended to ensure trouble free startup after shutdown.

Never start the pump unless the shaft is completely stopped. Follow start-up procedures whenever returning equipment to operation.

Recommended Starts Per Hour:

Refer to the Motor Data Sheet in **Appendix B** for the recommended starts per hour.

DO NOT EXCEED the start times per hour, and allow resting time to prevent damage to motor between starts. Damage caused by excessive starts per hour or inadequate resting time is NOT COVERED BY GPM, INC. WARRANTY.

Trouble Shooting Chart:

The following chart can be used to identify, diagnose, and solve common troubles. Other identified issues will require contacting GPM, Inc. for assistance.

Trouble Shooting Chart for Submersible GPM-Eliminator™ Pumps		
Problem	**Possible Cause**	**Recommended Action**
No liquid is delivered by pump.	No liquid in sump	Inspect liquid level and pipe lines to the sump, ensure none are clogged and ensure other equipment is working properly
	Impeller or discharge line is plugged	Find blockage and clear
	Pump speed is too low	Check voltage and frequency Check electric line quality Check belts/sheaves (if applicable) Check coupling mechanism (if applicable)
	Direction of rotation is backwards	Check wiring diagram & verify rotation Change phases if needed
Not enough liquid is delivered.	Pump speed is too low	Check voltage and frequency Check electric line quality Check belts/sheaves (if applicable) Check coupling mechanism (if applicable)
	Impeller or discharge line is partially blocked	Find blockage and clear
	Direction of rotation is backwards	Check wiring diagram & verify rotation Change phases if needed
	Wear or damage to pump component (Impeller, hose liner, guide vanes, etc.)	Service and repair pump or components
Not enough discharge pressure	Pump speed is too low	Check voltage and frequency Check electric line quality Check belts/sheaves (if applicable) Check coupling mechanism (if applicable)
	Direction of rotation is backwards	Check wiring diagram & verify rotation Change phases if needed
	Air or gas in the liquid	Check fluid for gas or air, reduce through engineering control
	Wear or damage to pump component. (Impeller, hose liner, guide vanes, etc.)	Service and repair pump or components
	NPSH low	Check fluid levels in sump and supply

Trouble Shooting Chart Continued

Trouble Shooting Chart for Submersible GPM-Eliminator™ Pumps		
Problem	**Possible Cause**	**Recommended Action**
Pump loses suction	Air or gas in the liquid	Check fluid for gas or air, reduce through engineering control
	Not enough water in the slurry mixture.	Add more water to the sump/mixture
Motor overload	Overheating motor	Check actual temperature with a thermometer
	Motor is taking excessive power	Check line quality, amperage and voltage at motor
	Head is lower than rated value	Check engineering for recommended static head and required Net Positive Suction Head Increase static head
	Liquid is heavier than rated value	Measure liquid density and assess difference with rated value
	Liquid is more viscous than rated value	Measure viscosity and assess difference with rated value
	Wear or damage to pump component. (Impeller, hose liner, guide vanes, etc.)	Service and repair pump or components
Excessive Vibration	Suction starved	Check fluid levels and static head requirements
	Discharge plugged	Find blockage and clear
	Impeller is plugged, damaged, or stuck	Inspect impeller for damage
	Equipment is out of balance	Contact GPM, Inc. for service
	Operation beyond pump BEP	Evaluate system and review pump curve
	Coupling out of alignment	Check runout on coupling
Shaft does not turn freely	Material stuck in impeller	Check impeller and pump entrance/exit Remove any debris
	Bearing Failure	Contact GPM, Inc. for service

Maintenance

Regular maintenance must be performed to ensure operational quality and effectiveness.

NOTE

Tampering with the pump or motor, other than to replace worn wet end parts, will void the warranty.

NOTE

All repairs must be performed by GPM-Eliminator™ Authorized Service Centers in order for warranty coverage to be honored.

GPM Eliminator™ AUTHORIZED SERVICE CENTER

GPM-Eliminator™ submersible pumps are designed to deliver years of trouble free operation in the most aggressive applications. Although periodic maintenance and part replacement may be necessary as a result of normal "wear and tear", the pump will normally require little attention.

The following inspection schedule is recommended to ensure continued trouble free operation. Depending on the severity of the service, inspections may need to be performed more or less often than the recommended intervals.

Weekly:

- Inspect the full length of the power cable for wear and cuts in the sheath. Replace any cable that is worn or cut through the outer sheath.
- If accessible, inspect the cable entrance housings for damage (e.g., cracks), or looseness. Tighten or replace as required.
- If accessible, inspect the cable holder/clamp for secureness. Ensure the clamp is tight around the cable and is attached to the radial bearing housing eyebolt by the clevis.

NOTE

Never lift the pump by the cable. Any tension will cause damage that will NOT be covered by Warranty.

- If accessible, visually inspect the outside of the pump, motor, case adaptor, and strainer basket for signs of wear, corrosion, or cracks.
- Remove caked on material that may act to insulate the motor.
- Listen to the pump while operating for unusual noises (e.g., electrical whine, bearing noise, etc.).
- Look for blockages in the suction inlet area or on the strainer basket. Remove as required.

Monthly:

- Record pump output flow, discharge pressure, and power draw. Compare to the pump curve (**Appendix C**) and motor data sheet (**Appendix B**) to verify performance. If the values deviate from normal operation or design, pump service may be required (See "Monitoring Pump Wear" later in this section for further information).
- If equipped, check the ground fault circuit and ground conductor monitoring devices for proper operation in accordance with local and federal electrical codes.
- If equipped and not connected to an auxiliary pump control panel, check the thermal sensor circuit and float switch circuit for continuity between the respective leads. Both circuits are normally closed. If the thermal sensor circuit is open, the motor is running too hot which will rapidly degrade insulation life and lead to failure. Investigate the reason why the motor is running hot. If the float switch circuit is open, there has been a breach of the mechanical seal. Check the condition of the barrier fluid as described later in this section. If the oil is discolored or appears to have emulsified (turned milky, white), the lower

mechanical seal has failed and needs to be replaced. Contact GPM, Inc. for repair needs.

Annually:

- Drain and replace the barrier fluid in the thrust bearing housing in accordance with the instructions later in this section. If the oil is discolored or appears to have emulsified (turned milky, white), the lower mechanical seal has failed and needs to be replaced. Contact GPM, Inc. for repair needs.
- Inspect the wet end of the pump. Remove the strainer basket and the wear plate (if applicable). Check the impeller, casing, wear plate, and agitator for wear and/or corrosion. Replace worn parts as required. Consult GPM, Inc. for adjusting the impeller clearances if a new impeller, wear plate, and/or casing has been installed. Tighten all fasteners as required.
- NOTE: GPM-Eliminator™ submersible motors are completely sealed and do not require user maintenance. Motor problems should be referred to an authorized GPM-Eliminator™ pump repair facility.

Monitoring Pump Wear:

There are a number of ways to establish when wet end parts require replacement, and all are based on typical mean time between failure intervals which must be established from experience for a given pump application. Wet end parts may last months or years depending on several factors including slurry density, particle hardness, pump operating speed, and where the pump is operated relative to its best efficiency point. Once a life trend is established for each of the wet end parts, they can be replaced at scheduled maintenance intervals.

A decrease in pump performance normally dictates when part replacement is required. This is established by monitoring pump output flow, discharge pressure, power draw, or a combination of all three. Once the actual operating value of each parameter deviates sufficiently from the values established when the wet end is new, it is time to replace one or more of the wet end parts.

For example, pressure loss is an indication of impeller wear. There are no hard rules as to how much pressure loss can be tolerated before an impeller should be replaced. This is based on experience for the particular application.

A short term increase in power draw is a direct indication of wet end wear. As the parts wear, overall pump efficiency is degraded and more power is required to meet demand. Eventually, the wear will lead to an inability to meet the head conditions and overall power consumption will decrease. Typically, output and pressure are affected at the same time. However, if overall power consumption is a major factor, wet end parts may be replaced for that reason, even when they are still capable of meeting system demands.

Barrier Fluid Replacement:

The barrier fluid used in GPM-Eliminator™ products is Mobil Synturion™ 6.

To begin changing the barrier fluid, the barrier fluid fill plug needs to be removed. Certain operating conditions may produce a pressure within the oil chamber. Because of this, carefully unscrew the fill plug to allow any positive pressure to be released.

Do not stand directly in front of the oil plug. Pressure could shoot plug, or spray fluid into the face.
ALWAYS WEAR EYE PROTECTION.

Once the fill plug has been removed, carefully tilt the pump onto its side with the barrier fluid drain port facing downwards. Position a container under the barrier fluid drain port. Remove the barrier fluid drain plug. Note the condition and quantity of the barrier fluid that

drains out. Dispose of the barrier fluid appropriately within state and federal guidelines. Place the pump back upright. Reinstall the barrier fluid drain plug using thread sealant. Using a funnel positioned in the barrier fluid fill port, pour in new Mobil Synturion™ 6 per the barrier fluid quantities table below.

Barrier Fluid Capacities by Motor Frame Size						
Frame Size	0	1	2	3	4	5
Qty. (Quarts)	5.25	6.5	6.5	6.5	20	20
Tolerance +/- 0.25 Quarts						

Install the barrier fluid fill plug using thread sealant.

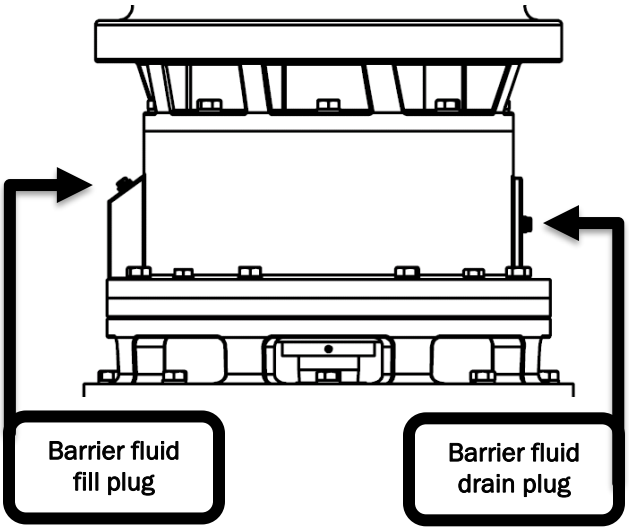

Bearing Maintenance:

GPM-Eliminator™ submersible pumps have a thrust bearing set and a radial bearing. If the pump indicates a bearing failure, contact GPM, Inc. for service recommendations.

Lubrication Notes:

- This pump has a special grease line running from the sole plate to the thrust bearing cover allowing for periodic lubrication of the thrust bearings. GPM uses Mobilgrease XHP 222 grease in the thrust bearing set. An identical or compatible grease must be used for relubrication. Use a hand-held low pressure grease gun to lubricate bearings. For this application, GPM recommends adding 50 grams of grease every 8 months. DO NOT over-grease the bearings.

- The radial bearing is a double sealed permanently lubricated bearing.

- Follow the motor manufacturers recommended lubrication practices for lubrication of the bearings within the motor. DO NOT over-grease the bearings.

Recommended Spare Parts:

Refer to **Appendix D** for the recommended spare parts list and part identification.

Page Intentionally Left Blank

Appendix A: Eliminator Information

ELIMINATOR DATA SHEET

PUMP INFORMATION:

MODEL: _____.

SERIAL: _____

CAPACITY (USGPM): _____

HEAD (FEET): _____

HORSEPOWER: _____

KW: _____ AMPS: _____

POLES: _____ RPM: _____

IMPELLER DIAMETER: _____

NOTES: _____

_____

_____

_____

_____

_____

CUSTOMER INFORMATION:

DATE PURCHASED: _____

PURCHASE ORDER: _____

COMPANY: _____

LOCATION: _____

ADDRESS: _____

CITY: _____

STATE/PROV: _____ ZIP: _____

COUNTRY: _____

SPECIAL INSTRUCTIONS: _____

_____

_____

_____

_____

_____

_____

_____

DISTRIBUTOR INFORMATION (if used):

SOLD BY: _____

PO#: _____

Appendix B: Toshiba Motor Information

Appendix C: Pump Curve

Appendix D: Drawings

Appendix E: Electrical Drawings

Appendix F: Safety Data Sheets (SDS)

MATERIAL SAFETY DATA SHEET

SECTION 1 PRODUCT AND COMPANY IDENTIFICATION

PRODUCT

Product Name: **SYNTURION 6**
Product Description: Synthetic Base Stocks and Additives
Product Code: 201560B01510, 604603-00, 97U848
Intended Use: Lubricant

COMPANY IDENTIFICATION

Supplier: **EXXON MOBIL CORPORATION**
3225 GALLOWS RD.
FAIRFAX, VA. 22037 USA

24 Hour Health Emergency	609-737-4411
Transportation Emergency Phone	800-424-9300
ExxonMobil Transportation No.	281-834-3296
Product Technical Information	800-662-4525, 800-947-9147
MSDS Internet Address	http://www.exxon.com, http://www.mobil.com

SECTION 2 COMPOSITION / INFORMATION ON INGREDIENTS

Reportable Hazardous Substance(s) or Complex Substance(s)

Name	CAS#	Concentration*
1-DECENE, DIMER HYDROGENATED	68649-11-6	40 - 50%
DODECENE, DIMER WITH 1-DECENE, HYDROGENATED	151006-58-5	40 - 50%

* All concentrations are percent by weight unless material is a gas. Gas concentrations are in percent by volume.

SECTION 3 HAZARDS IDENTIFICATION

This material is considered to be hazardous according to regulatory guidelines (see (M)SDS Section 15).

POTENTIAL HEALTH EFFECTS

Toxic by inhalation. If swallowed, may be aspirated and cause lung damage. Airborne low-viscosity branched alkanes can affect lungs. High-pressure injection under skin may cause serious damage.

Target Organs: Lung |

NFPA Hazard ID:	Health:	1	Flammability:	1	Reactivity:	0
HMIS Hazard ID:	Health:	1	Flammability:	1	Reactivity:	0

NOTE: This material should not be used for any other purpose than the intended use in Section 1 without expert

advice. Health studies have shown that chemical exposure may cause potential human health risks which may vary from person to person.

SECTION 4 FIRST AID MEASURES

INHALATION

Remove from further exposure. For those providing assistance, avoid exposure to yourself or others. Use adequate respiratory protection. If respiratory irritation, dizziness, nausea, or unconsciousness occurs, seek immediate medical assistance. If breathing has stopped, assist ventilation with a mechanical device or use mouth-to-mouth resuscitation.

SKIN CONTACT

Wash contact areas with soap and water. If product is injected into or under the skin, or into any part of the body, regardless of the appearance of the wound or its size, the individual should be evaluated immediately by a physician as a surgical emergency. Even though initial symptoms from high pressure injection may be minimal or absent, early surgical treatment within the first few hours may significantly reduce the ultimate extent of injury.

EYE CONTACT

Flush thoroughly with water. If irritation occurs, get medical assistance.

INGESTION

Seek immediate medical attention. Do not induce vomiting.

NOTE TO PHYSICIAN

If ingested, material may be aspirated into the lungs and cause chemical pneumonitis. Treat appropriately.

SECTION 5 FIRE FIGHTING MEASURES

EXTINGUISHING MEDIA

Appropriate Extinguishing Media: Use water fog, foam, dry chemical or carbon dioxide (CO_2) to extinguish flames.

Inappropriate Extinguishing Media: Straight Streams of Water

FIRE FIGHTING

Fire Fighting Instructions: Evacuate area. Prevent runoff from fire control or dilution from entering streams, sewers, or drinking water supply. Firefighters should use standard protective equipment and in enclosed spaces, self-contained breathing apparatus (SCBA). Use water spray to cool fire exposed surfaces and to protect personnel.

Unusual Fire Hazards: Hazardous material. Firefighters should consider protective equipment indicated in Section 8.

Hazardous Combustion Products: Smoke, Fume, Aldehydes, Sulfur oxides, Incomplete combustion products, Oxides of carbon

FLAMMABILITY PROPERTIES

Flash Point [Method]: >140C (284F) [ASTM D-92]
Flammable Limits (Approximate volume % in air): LEL: N/D UEL: N/D

Autoignition Temperature: N/D

SECTION 6 ACCIDENTAL RELEASE MEASURES

NOTIFICATION PROCEDURES

In the event of a spill or accidental release, notify relevant authorities in accordance with all applicable regulations. US regulations require reporting releases of this material to the environment which exceed the applicable reportable quantity or oil spills which could reach any waterway including intermittent dry creeks. The National Response Center can be reached at (800)424-8802.

PROTECTIVE MEASURES

Avoid contact with spilled material. Warn or evacuate occupants in surrounding and downwind areas if required due to toxicity or flammability of the material. See Section 5 for fire fighting information. See the Hazard Identification Section for Significant Hazards. See Section 4 for First Aid Advice. See Section 8 for advice on the minimum requirements for personal protective equipment. Additional protective measures may be necessary, depending on the specific circumstances and/or the expert judgment of the emergency responders.

SPILL MANAGEMENT

Land Spill: Stop leak if you can do it without risk. Absorb or cover with dry earth, sand or other non-combustible material and transfer to containers. Recover by pumping or with suitable absorbent.

Water Spill: Stop leak if you can do it without risk. Confine the spill immediately with booms. Warn other shipping. Remove from the surface by skimming or with suitable absorbents. Seek the advice of a specialist before using dispersants.

Water spill and land spill recommendations are based on the most likely spill scenario for this material; however, geographic conditions, wind, temperature, (and in the case of a water spill) wave and current direction and speed may greatly influence the appropriate action to be taken. For this reason, local experts should be consulted. Note: Local regulations may prescribe or limit action to be taken.

ENVIRONMENTAL PRECAUTIONS

Large Spills: Dike far ahead of liquid spill for later recovery and disposal. Prevent entry into waterways, sewers, basements or confined areas.

SECTION 7 HANDLING AND STORAGE

HANDLING

Avoid breathing mists or vapors. Prevent small spills and leakage to avoid slip hazard. Material can accumulate static charges which may cause an electrical spark (ignition source). When the material is handled in bulk, an electrical spark could ignite any flammable vapors from liquids or residues that may be present (e.g., during switch-loading operations). Use proper bonding and/or ground procedures. However, bonding and grounds may not eliminate the hazard from static accumulation. Consult local applicable standards for guidance. Additional references include American Petroleum Institute 2003 (Protection Against Ignitions Arising out of Static, Lightning and Stray Currents) or National Fire Protection Agency 77 (Recommended Practice on Static Electricity) or CENELEC CLC/TR 50404 (Electrostatics - Code of practice for the avoidance of hazards due to static electricity).

Static Accumulator: This material is a static accumulator.

STORAGE

The container choice, for example storage vessel, may effect static accumulation and dissipation. Do not store in open or unlabelled containers.

SECTION 8 EXPOSURE CONTROLS / PERSONAL PROTECTION

EXPOSURE LIMIT VALUES

Exposure limits/standards (Note: Exposure limits are not additive)

Source	Form	Limit / Standard			NOTE	Source
1-DECENE, DIMER HYDROGENATED	Aerosols (thoracic fraction)	TWA	1 mg/m3		N/A	ExxonMobil
DODECENE, DIMER WITH 1-DECENE, HYDROGENATED	Aerosols (thoracic fraction)	TWA	1 mg/m3		N/A	ExxonMobil

NOTE: Limits/standards shown for guidance only. Follow applicable regulations.

ENGINEERING CONTROLS

The level of protection and types of controls necessary will vary depending upon potential exposure conditions. Control measures to consider:

Adequate ventilation should be provided whenever the material is heated or mists are generated.

PERSONAL PROTECTION

Personal protective equipment selections vary based on potential exposure conditions such as applications, handling practices, concentration and ventilation. Information on the selection of protective equipment for use with this material, as provided below, is based upon intended, normal usage.

Respiratory Protection: If engineering controls do not maintain airborne contaminant concentrations at a level which is adequate to protect worker health, an approved respirator may be appropriate. Respirator selection, use, and maintenance must be in accordance with regulatory requirements, if applicable. Types of respirators to be considered for this material include:

Particulate air-purifying respirator approved for dust / oil mist is recommended.

For high airborne concentrations, use an approved supplied-air respirator, operated in positive pressure mode. Supplied air respirators with an escape bottle may be appropriate when oxygen levels are inadequate, gas/vapor warning properties are poor, or if air purifying filter capacity/rating may be exceeded.

Hand Protection: Any specific glove information provided is based on published literature and glove manufacturer data. Glove suitability and breakthrough time will differ depending on the specific use conditions. Contact the glove manufacturer for specific advice on glove selection and breakthrough times for your use conditions. Inspect and replace worn or damaged gloves. The types of gloves to be considered for this material include:

No protection is ordinarily required under normal conditions of use.

Eye Protection: If contact is likely, safety glasses with side shields are recommended.

Skin and Body Protection: Any specific clothing information provided is based on published literature or manufacturer data. The types of clothing to be considered for this material include:

No skin protection is ordinarily required under normal conditions of use. In accordance with good industrial hygiene practices, precautions should be taken to avoid skin contact.

Specific Hygiene Measures: Always observe good personal hygiene measures, such as washing after handling the material and before eating, drinking, and/or smoking. Routinely wash work clothing and protective equipment to remove contaminants. Discard contaminated clothing and footwear that cannot be cleaned. Practice good housekeeping.

ENVIRONMENTAL CONTROLS

See Sections 6, 7, 12, 13.

SECTION 9 PHYSICAL AND CHEMICAL PROPERTIES

Note: Physical and chemical properties are provided for safety, health and environmental considerations only and may not fully represent product specifications. Contact the Supplier for additional information.

GENERAL INFORMATION

Physical State: Liquid
Color: Colorless
Odor: Characteristic
Odor Threshold: N/D

IMPORTANT HEALTH, SAFETY, AND ENVIRONMENTAL INFORMATION

Relative Density (at 15 C): 0.797
Flash Point [Method]: >140C (284F) [ASTM D-92]
Flammable Limits (Approximate volume % in air): LEL: N/D UEL: N/D
Autoignition Temperature: N/D
Boiling Point / Range: 310C (590F)
Vapor Density (Air = 1): N/D
Vapor Pressure: < 0.013 kPa (0.1 mm Hg) at 20 C
Evaporation Rate (n-butyl acetate = 1): N/D
pH: N/A
Log Pow (n-Octanol/Water Partition Coefficient): N/D
Solubility in Water: Negligible
Viscosity: 5.7 cSt (5.7 mm2/sec) at 40 C
Oxidizing Properties: See Hazards Identification Section.

OTHER INFORMATION

Freezing Point: N/D
Melting Point: N/A
Pour Point: -54°C (-65°F)

SECTION 10 STABILITY AND REACTIVITY

STABILITY: Material is stable under normal conditions.

CONDITIONS TO AVOID: Excessive heat. High energy sources of ignition.

MATERIALS TO AVOID: Strong oxidizers

HAZARDOUS DECOMPOSITION PRODUCTS: Material does not decompose at ambient temperatures.

HAZARDOUS POLYMERIZATION: Will not occur.

SECTION 11 TOXICOLOGICAL INFORMATION

ACUTE TOXICITY

Route of Exposure	Conclusion / Remarks
Inhalation	
Toxicity (Rat): LC50 = 3800 mg/m3	Moderately toxic. Based on test data for structurally similar materials.
Irritation (Rat): No end point data.	Elevated temperatures or mechanical action may form vapors, mist, or fumes which may be irritating to the eyes, nose, throat, or lungs. Based on test data for structurally similar materials.
Ingestion	
Toxicity (Rat): LD50 > 2000 mg/kg	Minimally Toxic. Based on test data for structurally similar materials.
Skin	
Toxicity (Rabbit): LD50 > 2000	Minimally Toxic. Based on test data for structurally similar materials.
Irritation (Rabbit): Data available.	Negligible irritation to skin at ambient temperatures. Based on test data for structurally similar materials.
Eye	
Irritation (Rabbit): Data available.	May cause mild, short-lasting discomfort to eyes. Based on test data for structurally similar materials.

CHRONIC/OTHER EFFECTS

For the product itself:

Small amounts of liquid aspirated into the lungs during ingestion or from vomiting may cause chemical pneumonitis or pulmonary edema.

Contains:

Low-viscosity branched alkanes: Acute exposures to high aerosol levels are harmful to lungs.

Additional information is available by request.

The following ingredients are cited on the lists below: None.

--REGULATORY LISTS SEARCHED--

1 = NTP CARC	3 = IARC 1	5 = IARC 2B
2 = NTP SUS	4 = IARC 2A	6 = OSHA CARC

SECTION 12 ECOLOGICAL INFORMATION

The information given is based on data available for the material, the components of the material, and similar materials.

ECOTOXICITY

Material -- Not expected to be harmful to aquatic organisms.
Material -- Not expected to demonstrate chronic toxicity to aquatic organisms.

PERSISTENCE AND DEGRADABILITY

Biodegradation:

Majority of components -- Expected to be inherently biodegradable

SECTION 13 DISPOSAL CONSIDERATIONS

Disposal recommendations based on material as supplied. Disposal must be in accordance with current applicable laws and regulations, and material characteristics at time of disposal.

DISPOSAL RECOMMENDATIONS

Product is suitable for burning in an enclosed controlled burner for fuel value or disposal by supervised incineration at very high temperatures to prevent formation of undesirable combustion products. Protect the environment. Dispose of used oil at designated sites. Minimize skin contact. Do not mix used oils with solvents, brake fluids or coolants.

REGULATORY DISPOSAL INFORMATION

RCRA Information: The unused product, in our opinion, is not specifically listed by the EPA as a hazardous waste (40 CFR, Part 261D), nor is it formulated to contain materials which are listed as hazardous wastes. It does not exhibit the hazardous characteristics of ignitability, corrositivity or reactivity and is not formulated with contaminants as determined by the Toxicity Characteristic Leaching Procedure (TCLP). However, used product may be regulated.

Empty Container Warning Empty Container Warning (where applicable): Empty containers may contain residue and can be dangerous. Do not attempt to refill or clean containers without proper instructions. Empty drums should be completely drained and safely stored until appropriately reconditioned or disposed. Empty containers should be taken for recycling, recovery, or disposal through suitably qualified or licensed contractor and in accordance with governmental regulations. DO NOT PRESSURISE, CUT, WELD, BRAZE, SOLDER, DRILL, GRIND, OR EXPOSE SUCH CONTAINERS TO HEAT, FLAME, SPARKS, STATIC ELECTRICITY, OR OTHER SOURCES OF IGNITION. THEY MAY EXPLODE AND CAUSE INJURY OR DEATH.

SECTION 14 TRANSPORT INFORMATION

LAND (DOT): Not Regulated for Land Transport

LAND (TDG): Not Regulated for Land Transport

SEA (IMDG): Not Regulated for Sea Transport according to IMDG-Code

AIR (IATA): Not Regulated for Air Transport

SECTION 15 REGULATORY INFORMATION

OSHA HAZARD COMMUNICATION STANDARD: When used for its intended purpose, this material is classified as hazardous in accordance with OSHA 29CFR 1910.1200.

Complies with the following national/regional chemical inventory requirements:: TSCA, AICS, ENCS, EINECS, KECI, DSL, PICCS

EPCRA: This material contains no extremely hazardous substances.

SARA (311/312) REPORTABLE HAZARD CATEGORIES: Immediate Health.

SARA (313) TOXIC RELEASE INVENTORY: This material contains no chemicals subject to the supplier notification requirements of the SARA 313 Toxic Release Program.

The following ingredients are cited on the lists below: None.

--REGULATORY LISTS SEARCHED--

1 = ACGIH ALL	6 = TSCA 5a2	11 = CA P65 REPRO	16 = MN RTK
2 = ACGIH A1	7 = TSCA 5e	12 = CA RTK	17 = NJ RTK
3 = ACGIH A2	8 = TSCA 6	13 = IL RTK	18 = PA RTK
4 = OSHA Z	9 = TSCA 12b	14 = LA RTK	19 = RI RTK
5 = TSCA 4	10 = CA P65 CARC	15 = MI 293	

Code key: CARC=Carcinogen; REPRO=Reproductive

SECTION 16 OTHER INFORMATION

N/D = Not determined, N/A = Not applicable

THIS SAFETY DATA SHEET CONTAINS THE FOLLOWING REVISIONS:
Revision Changes:
Section 06: Protective Measures was modified.
Section 06: Notification Procedures - Header was modified.
Section 13: Disposal Considerations - Disposal Recommendations was modified.
Section 10 Stability and Reactivity - Header was modified.
Section 13: Disposal Recommendations - Note was modified.
Section 13: Empty Container Warning was modified.
Section 09: Phys/Chem Properties Note was modified.
Section 08: Personal Protection was modified.
Section 08: Hand Protection was modified.
Section 07: Handling and Storage - Handling was modified.
Section 07: Handling and Storage - Storage Phrases was modified.
Hazard Identification: Health Hazards was modified.
Section 05: Hazardous Combustion Products was modified.

Section 06: Accidental Release - Spill Management - Water was modified.
Section 09: Relative Density - Header was modified.
Section 09: Flash Point C(F) was modified.
Section 09: Viscosity was modified.
Section 14: Sea (IMDG) - Header was modified.
Section 14: Air (IATA) - Header was modified.
Section 14: LAND (TDG) - Header was modified.
Section 14: LAND (DOT) - Header was modified.
Composition: Component table was modified.
Section 15: List Citation Table - Header was modified.
Section 14: LAND (DOT) - Default was modified.
Section 14: LAND (TDG) Default was modified.
Section 14: Sea (IMDG) - Default was modified.
Section 14: Air (IATA) - Default was modified.
Section 15: National Chemical Inventory Listing - Header was modified.
Section 15: National Chemical Inventory Listing was modified.
Section 16: Water Spill was modified.
Section 16: NA Contains was modified.
Section 08: Exposure limits/standards was modified.
Section 06: Notification Procedures was modified.
Section 11: Chronic Tox - Component - Header was modified.
Section 16: Empty Container Warning was modified.
Section 09: Oxidizing Properties was modified.
Section 08: OEL Table - Notation Column - Header was modified.
Section 08: Exposure Limit Values - Header was modified.
Section 01: Company Contact Methods Sorted by Priority was modified.
Section 11: Chronic Tox - Component was added.
Section 15: Chemical Name - Header was deleted.
Section 15: CAS Number - Header was deleted.
Section 15: List Citations - Header was deleted.
Section 15: List Citations Table was deleted.
Section 15: TSCA Class 2 Statement was deleted.

PRECAUTIONARY LABEL TEXT:
Empty Container Warning (where applicable): Empty containers may contain residue and can be dangerous. Do not attempt to refill or clean containers without proper instructions. Empty drums should be completely drained and safely stored until appropriately reconditioned or disposed. Empty containers should be taken for recycling, recovery, or disposal through suitably qualified or licensed contractor and in accordance with governmental regulations. DO NOT PRESSURISE, CUT, WELD, BRAZE, SOLDER, DRILL, GRIND, OR EXPOSE SUCH CONTAINERS TO HEAT, FLAME, SPARKS, STATIC ELECTRICITY, OR OTHER SOURCES OF IGNITION. THEY MAY EXPLODE AND CAUSE INJURY OR DEATH.

Contains: DODECENE, DIMER WITH 1-DECENE, HYDROGENATED
WARNING!
HEALTH HAZARDS
Toxic by inhalation. If swallowed, may be aspirated and cause lung damage.
Target Organs: Lung |

PRECAUTIONS
Avoid breathing mists or vapors.

FIRST AID

Inhalation: Remove from further exposure. For those providing assistance, avoid exposure to yourself or others. Use adequate respiratory protection. If respiratory irritation, dizziness, nausea, or unconsciousness occurs, seek immediate medical assistance. If breathing has stopped, assist ventilation with a mechanical device or use mouth-to-mouth resuscitation.

Eye: Flush thoroughly with water. If irritation occurs, get medical assistance.

Oral: Seek immediate medical attention. Do not induce vomiting.

Skin: Wash contact areas with soap and water. If product is injected into or under the skin, or into any part of the body, regardless of the appearance of the wound or its size, the individual should be evaluated immediately by a physician as a surgical emergency. Even though initial symptoms from high pressure injection may be minimal or absent, early surgical treatment within the first few hours may significantly reduce the ultimate extent of injury.

FIRE FIGHTING MEDIA
Use water fog, foam, dry chemical or carbon dioxide (CO_2) to extinguish flames.

SPILL/LEAK
Land Spill: Stop leak if you can do it without risk. Recover by pumping or with suitable absorbent.

Water Spill: Stop leak if you can do it without risk. Confine the spill immediately with booms. Warn other shipping. Remove from the surface by skimming or with suitable absorbents. Report spills as required to appropriate authorities. Seek the advice of a specialist before using dispersants.
Use
Not intended or suitable for use in or around a household or dwelling.

Internal Use Only
MHC: 1A,0,2,0,0,1 PPEC: AP

DGN: 2008249XUS (1012147)

MATERIAL SAFETY DATA SHEET

SECTION 1 PRODUCT AND COMPANY IDENTIFICATION

PRODUCT

Product Name: **MOBILGREASE XHP 222**
Product Description: Base Oil and Additives
Product Code: 530436-00, 97E898
Intended Use: Grease

COMPANY IDENTIFICATION

Supplier: **EXXON MOBIL CORPORATION**
3225 GALLOWS RD.
FAIRFAX, VA. 22037 USA

24 Hour Health Emergency	609-737-4411
Transportation Emergency Phone	800-424-9300
ExxonMobil Transportation No.	281-834-3296
MSDS Requests	713-613-3661
Product Technical Information	800-662-4525, 800-947-9147
MSDS Internet Address	http://www.exxon.com, http://www.mobil.com

SECTION 2 COMPOSITION / INFORMATION ON INGREDIENTS

Reportable Hazardous Substance(s) or Complex Substance(s)

Name	CAS#	Concentration*
PHOSPHORODITHOIC ACID, O,O-DI C1-14-ALKYL ESTERS, ZINC SALTS (2:1) (ZDDP)	68649-42-3	< 2.5%

* All concentrations are percent by weight unless material is a gas. Gas concentrations are in percent by volume.

SECTION 3 HAZARDS IDENTIFICATION

This material is not considered to be hazardous according to regulatory guidelines (see (M)SDS Section 15).

POTENTIAL HEALTH EFFECTS

Low order of toxicity. Excessive exposure may result in eye, skin, or respiratory irritation. High-pressure injection under skin may cause serious damage.

NFPA Hazard ID:	Health: 0	Flammability: 1	Reactivity: 0
HMIS Hazard ID:	Health: 0	Flammability: 1	Reactivity: 0

NOTE: This material should not be used for any other purpose than the intended use in Section 1 without expert advice. Health studies have shown that chemical exposure may cause potential human health risks which may vary from person to person.

SECTION 4 FIRST AID MEASURES

INHALATION

At ambient/normal handling temperatures, minimal or no irritation due to inhalation of vapor/mist is expected.

SKIN CONTACT

Wash contact areas with soap and water. If product is injected into or under the skin, or into any part of the body, regardless of the appearance of the wound or its size, the individual should be evaluated immediately by a physician as a surgical emergency. Even though initial symptoms from high pressure injection may be minimal or absent, early surgical treatment within the first few hours may significantly reduce the ultimate extent of injury.

EYE CONTACT

Flush thoroughly with water. If irritation occurs, get medical assistance.

INGESTION

First aid is normally not required. Seek medical attention if discomfort occurs.

SECTION 5 FIRE FIGHTING MEASURES

EXTINGUISHING MEDIA

Appropriate Extinguishing Media: Use water fog, foam, dry chemical or carbon dioxide (CO2) to extinguish flames.

Inappropriate Extinguishing Media: Straight Streams of Water

FIRE FIGHTING

Fire Fighting Instructions: Evacuate area. Prevent runoff from fire control or dilution from entering streams, sewers, or drinking water supply. Firefighters should use standard protective equipment and in enclosed spaces, self-contained breathing apparatus (SCBA). Use water spray to cool fire exposed surfaces and to protect personnel.

Hazardous Combustion Products: Sulfur oxides, Smoke, Fume, Aldehydes, Incomplete combustion products, Oxides of carbon

FLAMMABILITY PROPERTIES

Flash Point [Method]: >204°C (400°F) [EST. FOR OIL, ASTM D-92 (COC)]
Flammable Limits (Approximate volume % in air): LEL: N/D UEL: N/D
Autoignition Temperature: N/D

SECTION 6 ACCIDENTAL RELEASE MEASURES

NOTIFICATION PROCEDURES

In the event of a spill or accidental release, notify relevant authorities in accordance with all applicable regulations. U.S. regulations require reporting releases of this material to the environment which exceed the reportable quantity or oil spills which could reach any waterway including intermittent dry creeks. The National Response Center can be reached at (800)424-8802.

SPILL MANAGEMENT

Land Spill: Allow spilled material to solidify and scrape up with shovels into a suitable container for recycle or disposal.

Water Spill: Confine the spill immediately with booms. Stop leak if you can do it without risk. Skim from surface.

Water spill and land spill recommendations are based on the most likely spill scenario for this material; however, geographic conditions, wind, temperature, (and in the case of a water spill) wave and current direction and speed may greatly influence the appropriate action to be taken. For this reason, local experts should be consulted. Note: Local regulations may prescribe or limit action to be taken.

ENVIRONMENTAL PRECAUTIONS

Prevent entry into waterways, sewers, basements or confined areas.

SECTION 7 HANDLING AND STORAGE

HANDLING

Prevent small spills and leakage to avoid slip hazard.

Static Accumulator: This material is not a static accumulator.

STORAGE

Do not store in open or unlabelled containers.

SECTION 8 EXPOSURE CONTROLS / PERSONAL PROTECTION

NOTE: Limits/standards shown for guidance only. Follow applicable regulations.

ENGINEERING CONTROLS

The level of protection and types of controls necessary will vary depending upon potential exposure conditions. Control measures to consider:

No special requirements under ordinary conditions of use and with adequate ventilation.

PERSONAL PROTECTION

Personal protective equipment selections vary based on potential exposure conditions such as applications, handling practices, concentration and ventilation. Information on the selection of protective equipment for use with this material, as provided below, is based upon intended, normal usage.

Respiratory Protection: If engineering controls do not maintain airborne contaminant concentrations at a level which is adequate to protect worker health, an approved respirator may be appropriate. Respirator selection, use, and maintenance must be in accordance with regulatory requirements, if applicable. Types of respirators to be considered for this material include:

No protection is ordinarily required under normal conditions of use and with adequate ventilation.

For high airborne concentrations, use an approved supplied-air respirator, operated in positive pressure mode. Supplied air respirators with an escape bottle may be appropriate when oxygen levels are inadequate, gas/vapor warning properties are poor, or if air purifying filter capacity/rating may be exceeded.

Hand Protection: Any specific glove information provided is based on published literature and glove manufacturer data. Work conditions can greatly effect glove durability; inspect and replace worn or damaged gloves. The types of gloves to be considered for this material include:
No protection is ordinarily required under normal conditions of use.

Eye Protection: If contact is likely, safety glasses with side shields are recommended.

Skin and Body Protection: Any specific clothing information provided is based on published literature or manufacturer data. The types of clothing to be considered for this material include:
No skin protection is ordinarily required under normal conditions of use. In accordance with good industrial hygiene practices, precautions should be taken to avoid skin contact.

Specific Hygiene Measures: Always observe good personal hygiene measures, such as washing after handling the material and before eating, drinking, and/or smoking. Routinely wash work clothing and protective equipment to remove contaminants. Discard contaminated clothing and footwear that cannot be cleaned. Practice good housekeeping.

ENVIRONMENTAL CONTROLS
See Sections 6, 7, 12, 13.

SECTION 9 PHYSICAL AND CHEMICAL PROPERTIES

Typical physical and chemical properties are given below. Consult the Supplier in Section 1 for additional data.

GENERAL INFORMATION
Physical State: Solid
Form: Semi-fluid
Color: Dark Blue
Odor: Characteristic
Odor Threshold: N/D

IMPORTANT HEALTH, SAFETY, AND ENVIRONMENTAL INFORMATION
Relative Density (at 15 °C): 0.91
Flash Point [Method]: >204°C (400°F) [EST. FOR OIL, ASTM D-92 (COC)]
Flammable Limits (Approximate volume % in air): LEL: N/D UEL: N/D
Autoignition Temperature: N/D
Boiling Point / Range: > 316°C (600°F)
Vapor Density (Air = 1): N/D
Vapor Pressure: < 0.013 kPa (0.1 mm Hg) at 20°C
Evaporation Rate (n-butyl acetate = 1): N/D
pH: N/A
Log Pow (n-Octanol/Water Partition Coefficient): > 3.5
Solubility in Water: Negligible
Viscosity: 220 cSt (220 mm²/sec) at 40 °C | >16 cSt (16 mm²/sec) at 100°C

Oxidizing Properties: See Sections 3, 15, 16.

OTHER INFORMATION

Freezing Point: N/D
Melting Point: >260°C (500°F)
DMSO Extract (mineral oil only), IP-346: < 3 %wt

NOTE: Most physical properties above are for the oil component in the material.

SECTION 10 STABILITY AND REACTIVITY

STABILITY: Material is stable under normal conditions.

CONDITIONS TO AVOID: Excessive heat. High energy sources of ignition.

MATERIALS TO AVOID: Strong oxidizers

HAZARDOUS DECOMPOSITION PRODUCTS: Material does not decompose at ambient temperatures.

HAZARDOUS POLYMERIZATION: Will not occur.

SECTION 11 TOXICOLOGICAL INFORMATION

ACUTE TOXICITY

Route of Exposure	Conclusion / Remarks
Inhalation	
Toxicity (Rat): LC50 > 5000 mg/m³	Minimally Toxic. Based on assessment of the components.
Irritation: No end point data.	Not determined.
Ingestion	
Toxicity (Rat): LD50 > 2000 mg/kg	Minimally Toxic. Based on test data for structurally similar materials.
Skin	
Toxicity (Rabbit): LD50 > 2000 mg/kg	Minimally Toxic. Based on test data for structurally similar materials.
Irritation (Rabbit): Data available.	Negligible irritation to skin at ambient temperatures. Based on assessment of the components.
Eye	
Irritation (Rabbit): Data available.	May cause mild, short-lasting discomfort to eyes. Based on assessment of the components.

CHRONIC/OTHER EFFECTS

Contains:

Base oil severely refined: Not carcinogenic in animal studies. Representative material passes IP-346, Modified Ames test, and/or other screening tests. Dermal and inhalation studies showed minimal effects; lung non-specific infiltration of immune cells, oil deposition and minimal granuloma formation. Not sensitizing in test animals.

C.I. Solvent blue: Positive in the Ames and Mouse Lymphoma mutagenicity assay.

Additional information is available by request.

The following ingredients are cited on the lists below: None.

--REGULATORY LISTS SEARCHED--

1 = NTP CARC	3 = IARC 1	5 = IARC 2B
2 = NTP SUS	4 = IARC 2A	6 = OSHA CARC

SECTION 12 ECOLOGICAL INFORMATION

The information given is based on data available for the material, the components of the material, and similar materials.

ECOTOXICITY

Material -- Not expected to be harmful to aquatic organisms.

MOBILITY

Base oil component -- Low solubility and floats and is expected to migrate from water to the land. Expected to partition to sediment and wastewater solids.

PERSISTENCE AND DEGRADABILITY

Biodegradation:

Base oil component -- Expected to be inherently biodegradable

BIOACCUMULATION POTENTIAL

Base oil component -- Has the potential to bioaccumulate, however metabolism or physical properties may reduce the bioconcentration or limit bioavailability.

SECTION 13 DISPOSAL CONSIDERATIONS

Disposal recommendations based on material as supplied. Disposal must be in accordance with current applicable laws and regulations, and material characteristics at time of disposal.

DISPOSAL RECOMMENDATIONS

Product is suitable for burning in an enclosed controlled burner for fuel value or disposal by supervised incineration at very high temperatures to prevent formation of undesirable combustion products.

REGULATORY DISPOSAL INFORMATION

RCRA Information: The unused product, in our opinion, is not specifically listed by the EPA as a hazardous waste (40 CFR, Part 261D), nor is it formulated to contain materials which are listed as hazardous wastes. It does not exhibit the hazardous characteristics of ignitability, corrositivity or reactivity and is not formulated with contaminants as determined by the Toxicity Characteristic Leaching Procedure (TCLP). However, used product may be regulated.

Empty Container Warning PRECAUTIONARY LABEL TEXT: Empty containers may retain residue and can be dangerous. DO NOT PRESSURIZE, CUT, WELD, BRAZE, SOLDER, DRILL, GRIND OR EXPOSE SUCH CONTAINERS TO HEAT, FLAME, SPARKS, STATIC ELECTRICITY, OR OTHER SOURCES OF IGNITION; THEY MAY EXPLODE AND CAUSE INJURY OR DEATH. Do not attempt to refill or clean container since residue is difficult

to remove. Empty drums should be completely drained, properly bunged and promptly returned to a drum reconditioner. All containers should be disposed of in an environmentally safe manner and in accordance with governmental regulations.

SECTION 14 TRANSPORT INFORMATION

LAND (DOT) : Not Regulated for Land Transport

LAND (TDG) : Not Regulated for Land Transport

SEA (IMDG) : Not Regulated for Sea Transport according to IMDG-Code

AIR (IATA) : Not Regulated for Air Transport

SECTION 15 REGULATORY INFORMATION

OSHA HAZARD COMMUNICATION STANDARD: When used for its intended purposes, this material is not classified as hazardous in accordance with OSHA 29 CFR 1910.1200.

NATIONAL CHEMICAL INVENTORY LISTING: AICS, EINECS, TSCA

EPCRA: This material contains no extremely hazardous substances.

SARA (311/312) REPORTABLE HAZARD CATEGORIES: None.

SARA (313) TOXIC RELEASE INVENTORY:

Chemical Name	CAS Number	Typical Value
PHOSPHORODITHOIC ACID, O,O-DI C1-14-ALKYL ESTERS, ZINC SALTS (2:1) (ZDDP)	68649-42-3	< 2.5%

The Following Ingredients are Cited on the Lists Below:*

Chemical Name	CAS Number	List Citations
DIPHENYLAMINE	122-39-4	5, 9, 18
PHOSPHORODITHOIC ACID, O,O-DI C1-14-ALKYL ESTERS, ZINC SALTS (2:1) (ZDDP)	68649-42-3	13, 15, 17
PHOSPHORUS	7723-14-0	1, 4
XYLENES	1330-20-7	5, 9, 15

--REGULATORY LISTS SEARCHED--

1 = ACGIH ALL	6 = TSCA 5a2	11 = CA P65 REPRO	16 = MN RTK
2 = ACGIH A1	7 = TSCA 5e	12 = CA RTK	17 = NJ RTK
3 = ACGIH A2	8 = TSCA 6	13 = IL RTK	18 = PA RTK
4 = OSHA Z	9 = TSCA 12b	14 = LA RTK	19 = RI RTK

5 = TSCA 4 10 = CA P65 CARC 15 = MI 293

Code key: CARC=Carcinogen; REPRO=Reproductive

* EPA recently added new chemical substances to its TSCA Section 4 test rules. Please contact the supplier to confirm whether the ingredients in this product currently appear on a TSCA 4 or TSCA 12b list.

SECTION 16 OTHER INFORMATION

N/D = Not determined, N/A = Not applicable

THIS SAFETY DATA SHEET CONTAINS THE FOLLOWING REVISIONS:

No revision information is available.

The information and recommendations contained herein are, to the best of ExxonMobil's knowledge and belief, accurate and reliable as of the date issued. You can contact ExxonMobil to insure that this document is the most current available from ExxonMobil. The information and recommendations are offered for the user's consideration and examination. It is the user's responsibility to satisfy itself that the product is suitable for the intended use. If buyer repackages this product, it is the user's responsibility to insure proper health, safety and other necessary information is included with and/or on the container. Appropriate warnings and safe-handling procedures should be provided to handlers and users. Alteration of this document is strictly prohibited. Except to the extent required by law, re-publication or retransmission of this document, in whole or in part, is not permitted. The term, "ExxonMobil" is used for convenience, and may include any one or more of ExxonMobil Chemical Company, Exxon Mobil Corporation, or any affiliates in which they directly or indirectly hold any interest.

Internal Use Only

MHC: 0,0,0,0,0,0 PPEC: A

DGN: 2006153XUS (550268)

Page Intentionally Left Blank

GPM Eliminator™

SOLID PUMPING SOLUTIONS

Factory:

4432 Venture Avenue
Duluth, MN 55811
Phone: (218) – 722 – 9904
Fax: (218) – 722 – 2826
E-Mail: info@gpmco.com
Web: gpmco.com

GPM INC.

SOLUTIONS DRIVEN™